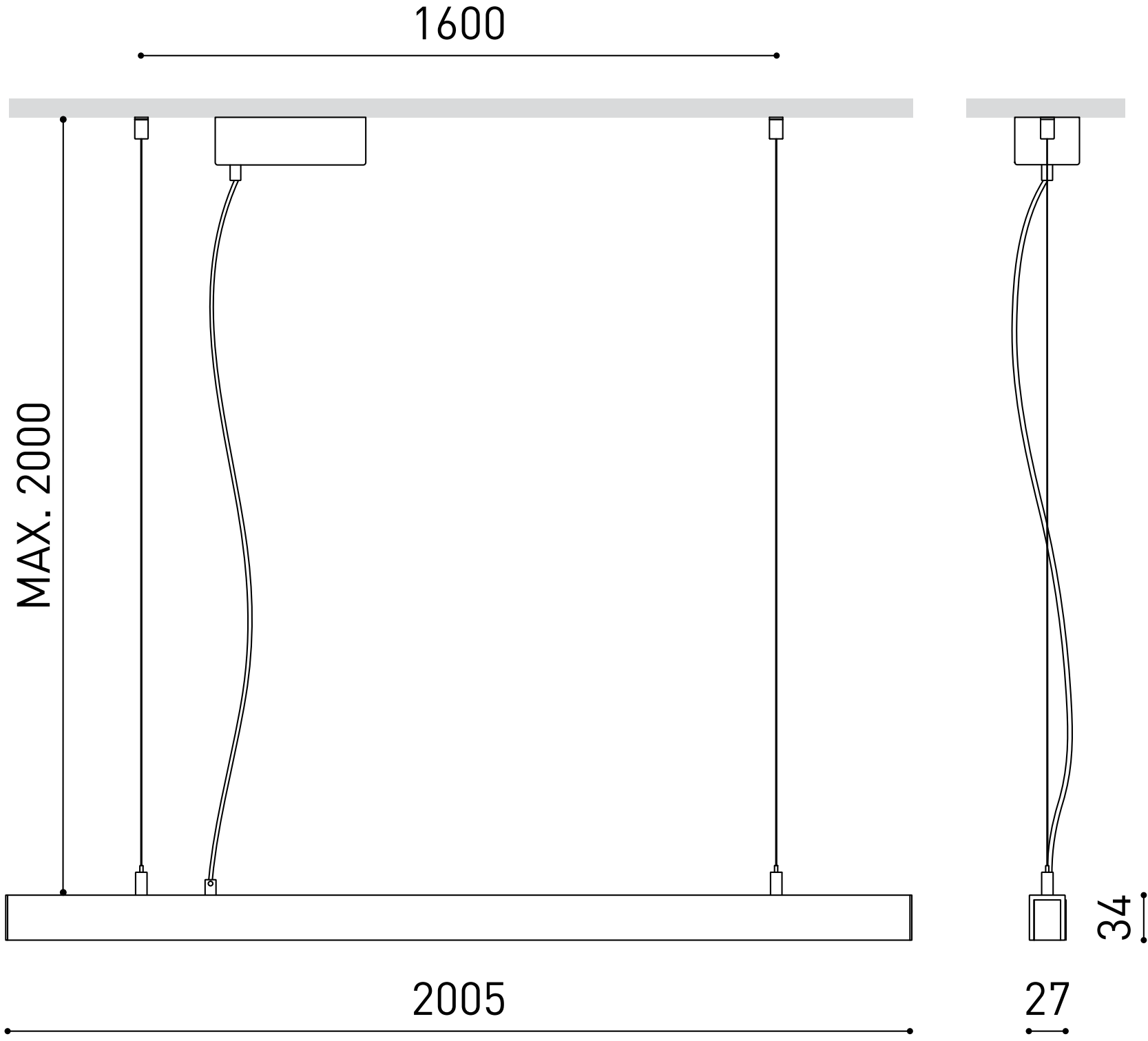
1600
MAX. 2000
2005
34
27